FISHMAN FLUENCE™

Tosin Abasi Pickup Set - Rev2&3

1xVolume, 1xTone, 3-Way 4-Pole Toggle Pickup Selector

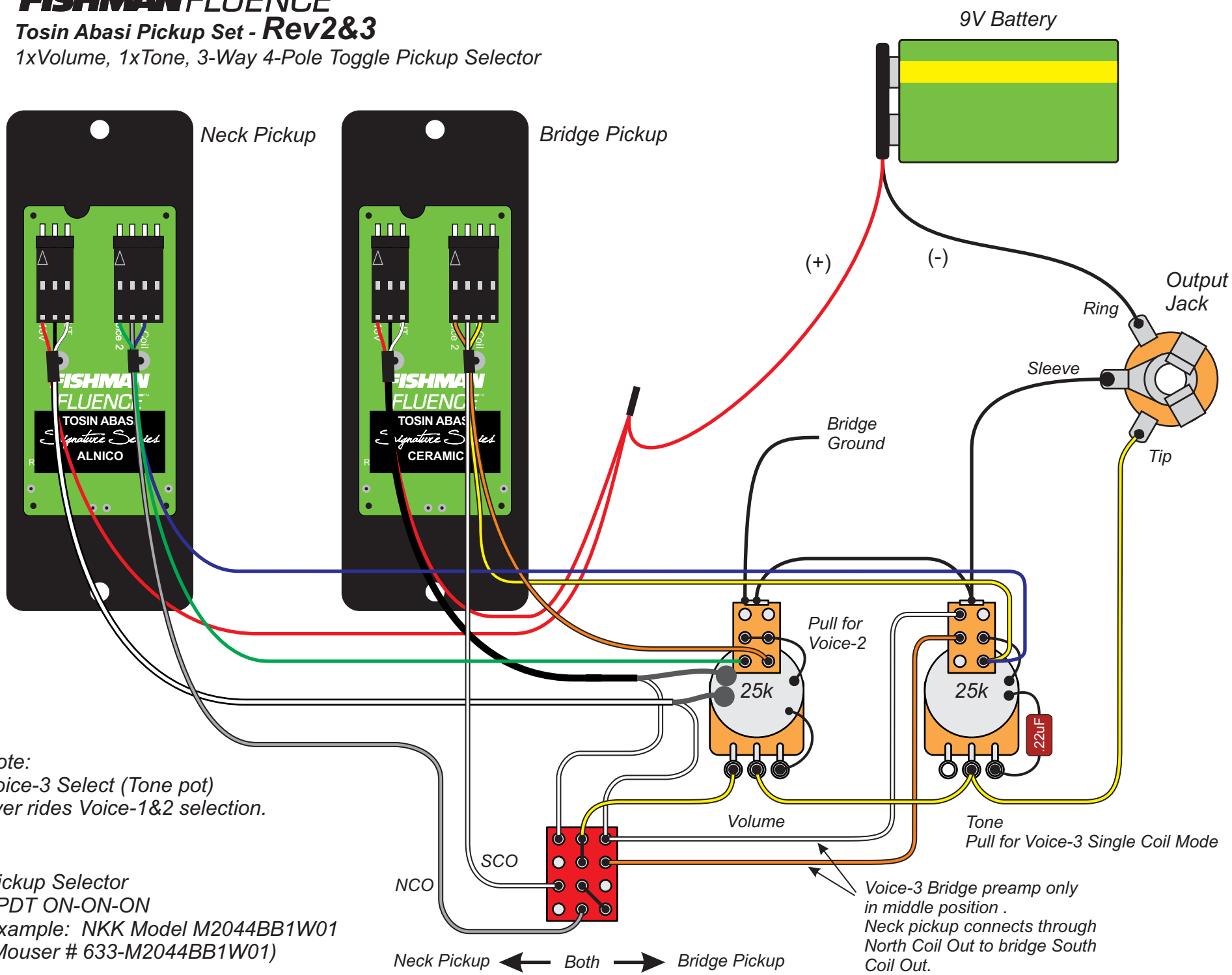

Note:
Voice-3 Select (Tone pot)
over rides Voice-1&2 selection.

Pickup Selector
4PDT ON-ON-ON
Example: NKK Model M2044BB1W01
(Mouser # 633-M2044BB1W01)