FISHMAN FLUENCE™

Stephen Carpenter V2 Set 6, 7, & 8-string (6-string shown)

Volume
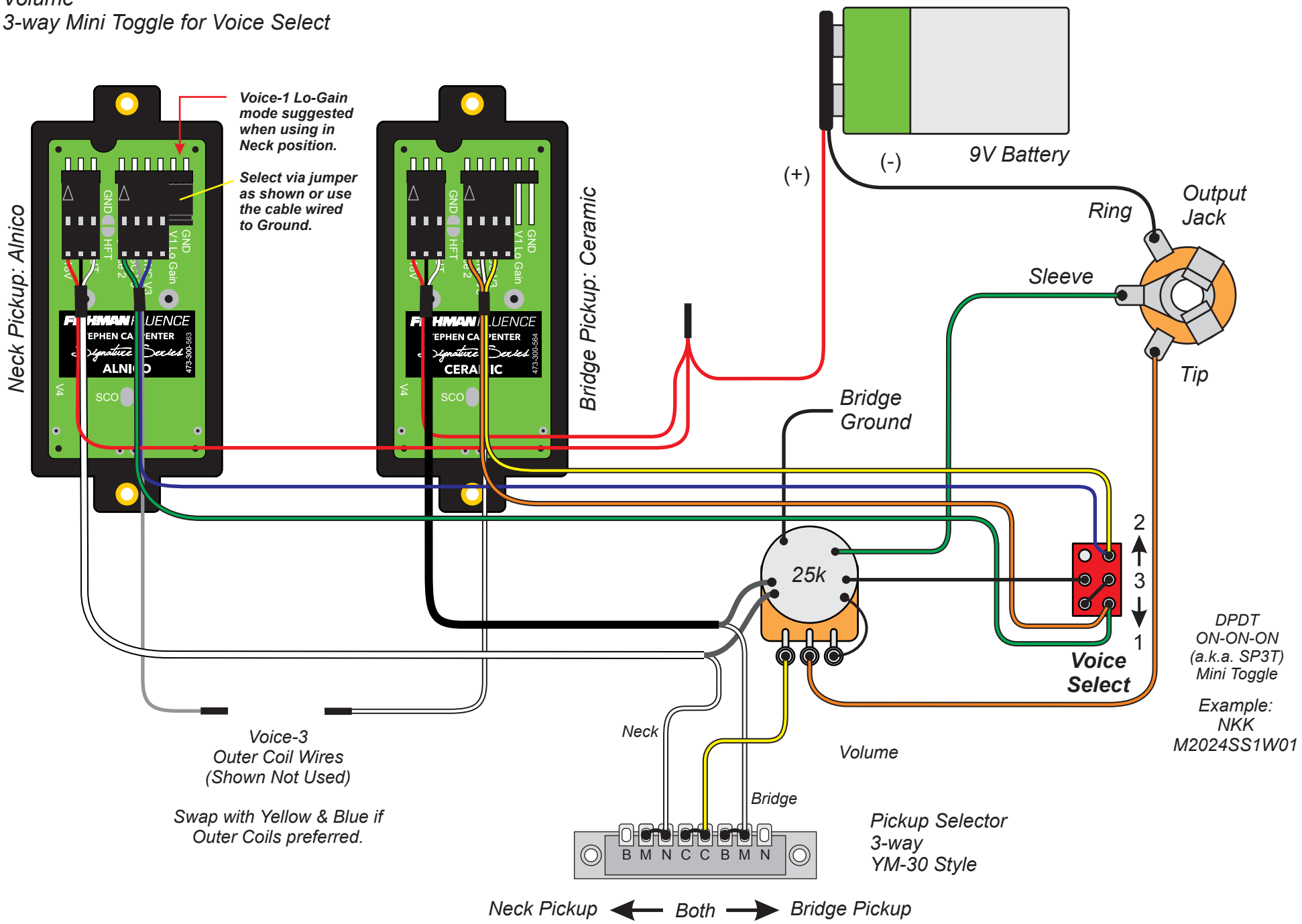
3-way Mini Toggle for Voice Select