FISHMAN FLUENCE™

HSS Wiring with SSP, SSA, & Classic Bridge Humbucker

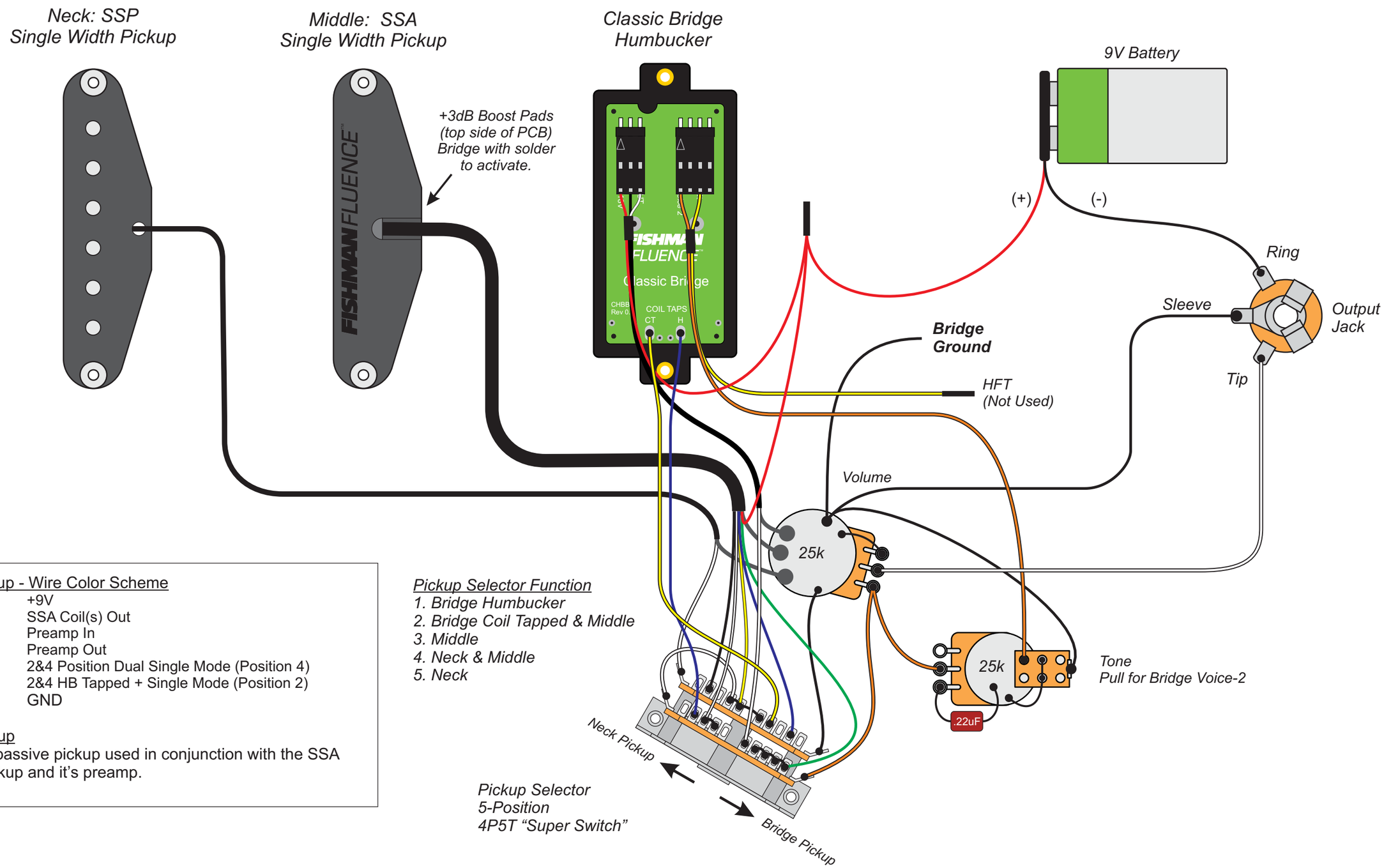

SSA Pickup - Wire Color Scheme

Red:	+9V
White:	SSA Coil(s) Out
Yellow:	Preamp In
Green:	Preamp Out
Blue:	2&4 Position Dual Single Mode (Position 4)
Black:	2&4 HB Tapped + Single Mode (Position 2)
Shield:	GND

SSP Pickup

This is a passive pickup used in conjunction with the SSA active pickup and it's preamp.