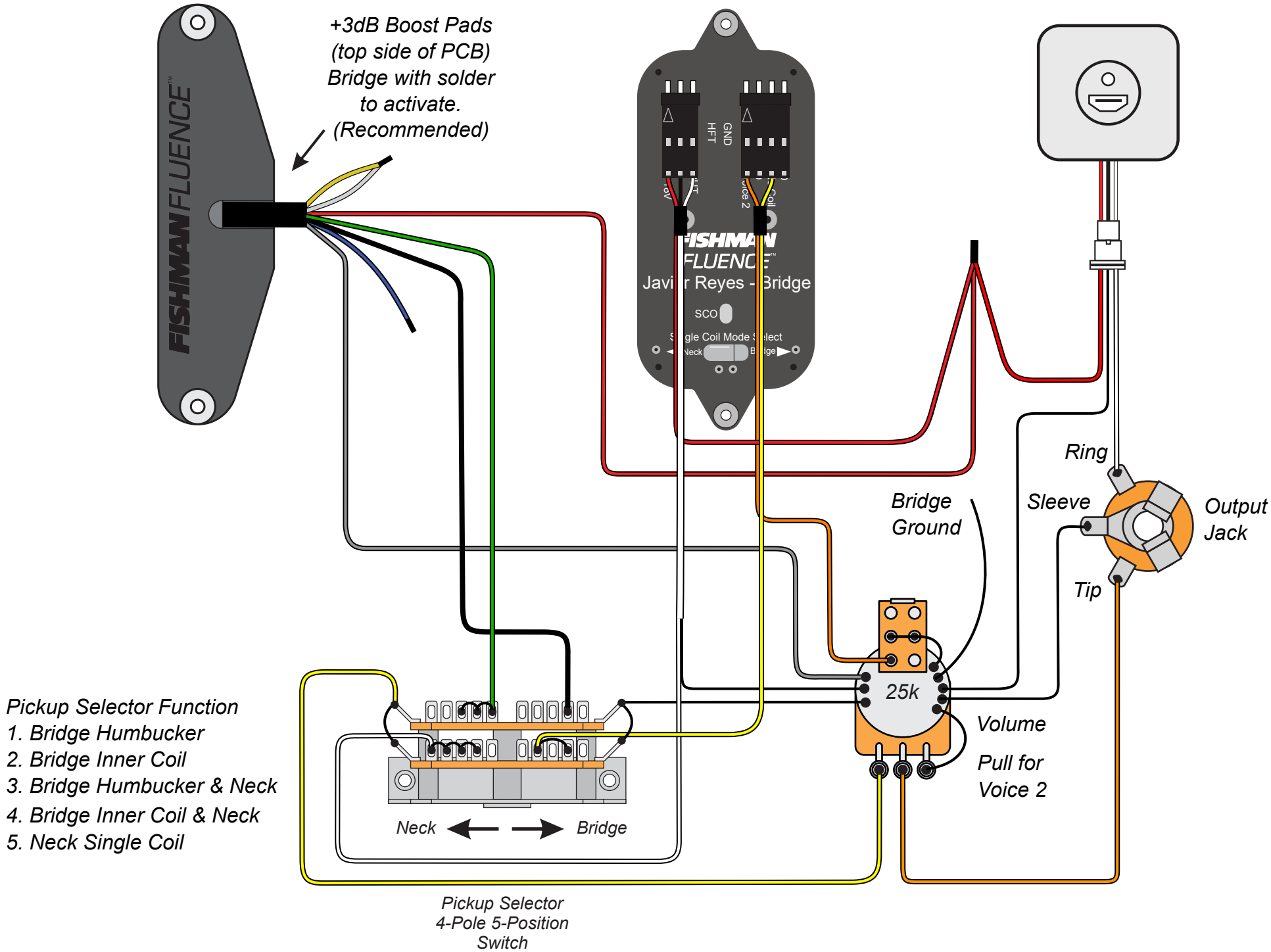
+3dB Boost Pads
(top side of PCB)
Bridge with solder
to activate.
(Recommended)
FISHMAN FLUENCE
GND
HFT
Single Coil Mode Select
Neck
Bridge
Ring
Sleeve
Tip
Output
Jack
Bridge
Ground
25k
Volume
Pull for
Voice 2
Neck
Bridge
Pickup Selector Function
1. Bridge Humbucker
2. Bridge Inner Coil
3. Bridge Humbucker & Neck
4. Bridge Inner Coil & Neck
5. Neck Single Coil
Pickup Selector
4-Pole 5-Position
Switch