FISHMAN FLUENCE™

Modern 3 Humbucker Set - 6,7,8,& 9-String (6-String set shown)

Volume: Pull for Voice-3 (Single Coil) Bridge & Neck
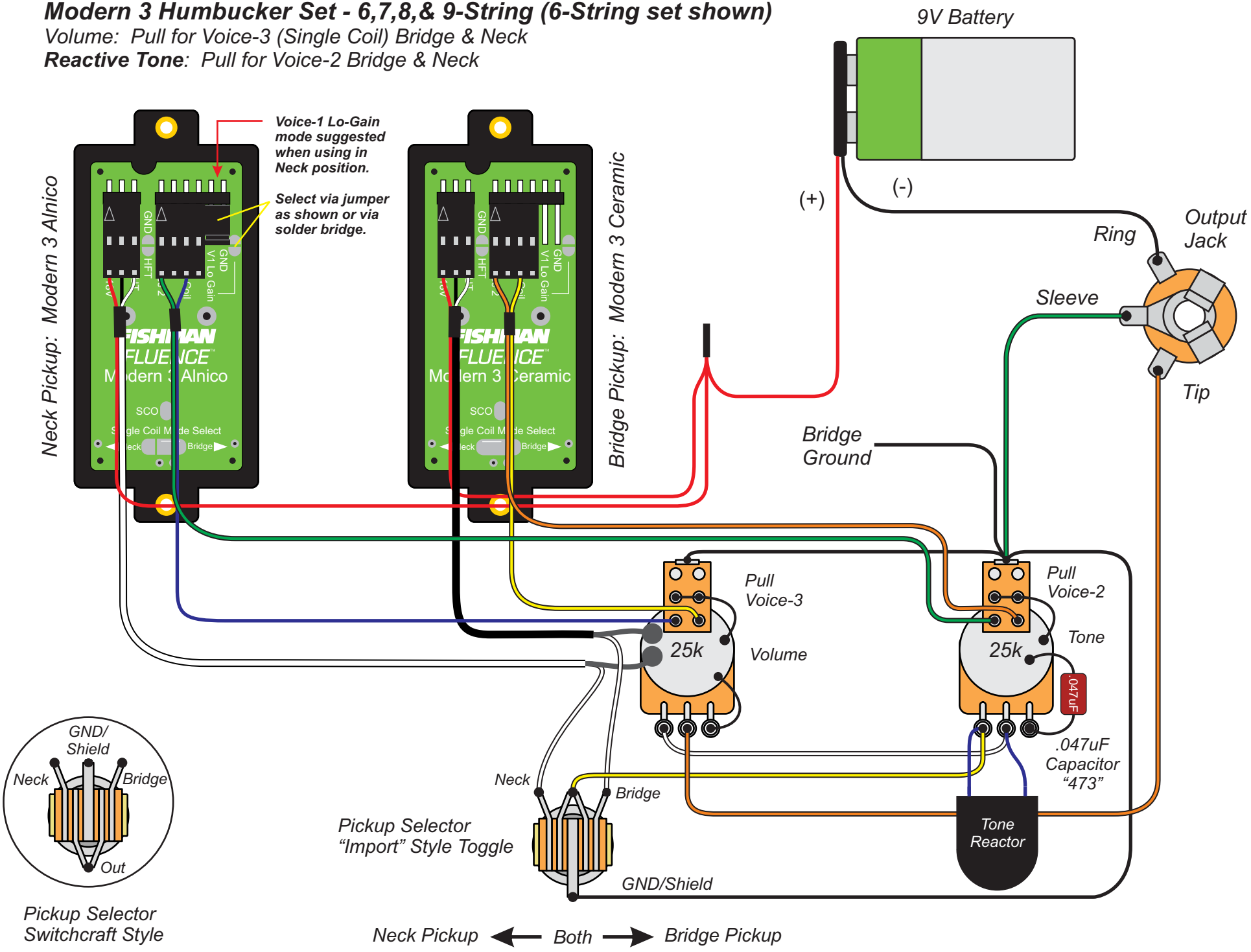
***Reactive Tone**: Pull for Voice-2 Bridge & Neck*