FISHMAN FLUENCE™
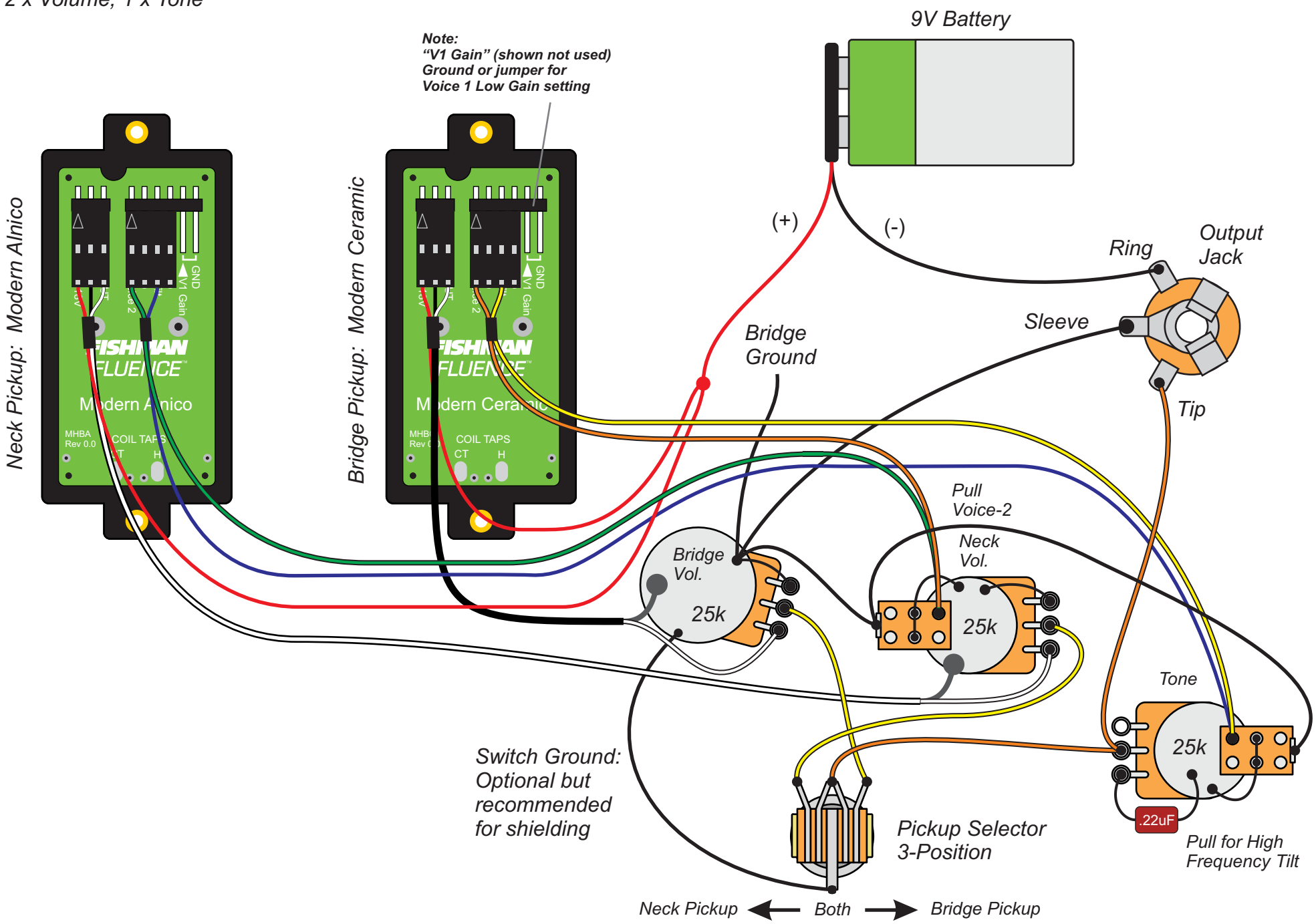
Modern Humbucker Set - Ceramic-Bridge/Alnico-Neck
2 x Volume, 1 x Tone