FISHMAN FLUENCE™

Stephen Carpenter V2 Set 6, 7, & 8-string

(6-string shown)

Volume, Tone

3-way Toggle Pickup Selector
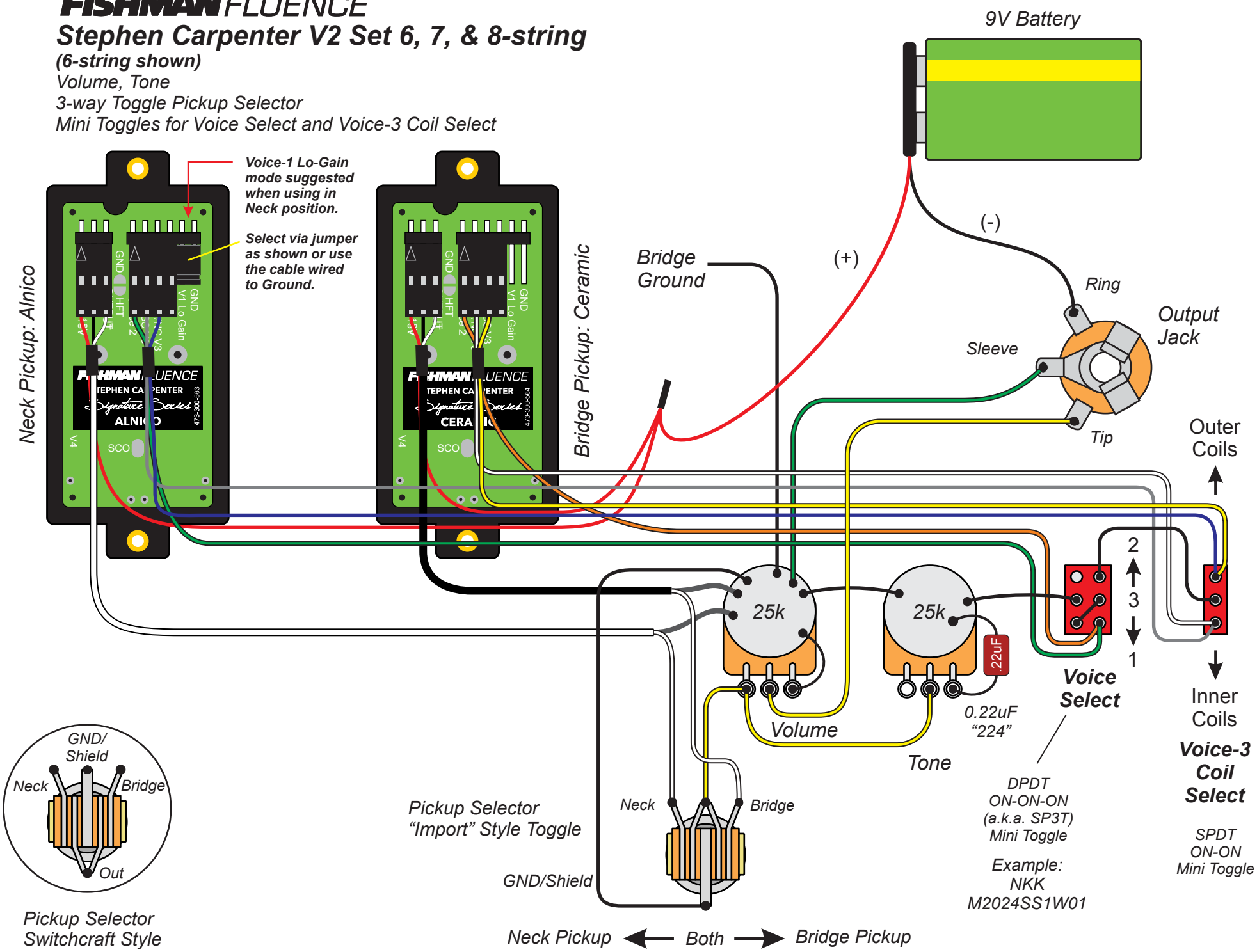
Mini Toggles for Voice Select and Voice-3 Coil Select