FISHMAN FLUENCE™
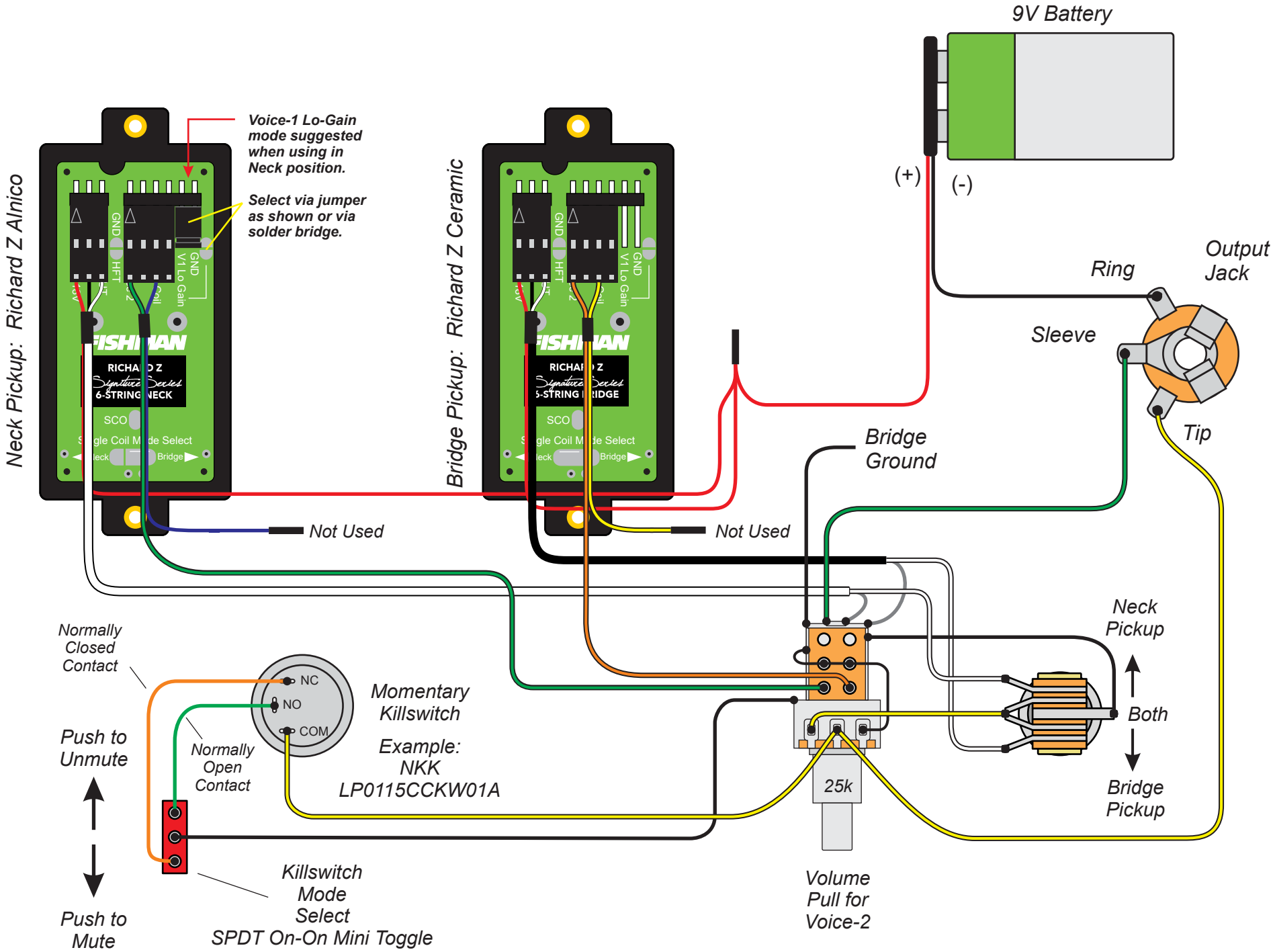
Richard Z Humbucker Set w Killswitch