FISHMAN FLUENCE™

Signature Series Richard Z Humbucker Set - 6-String
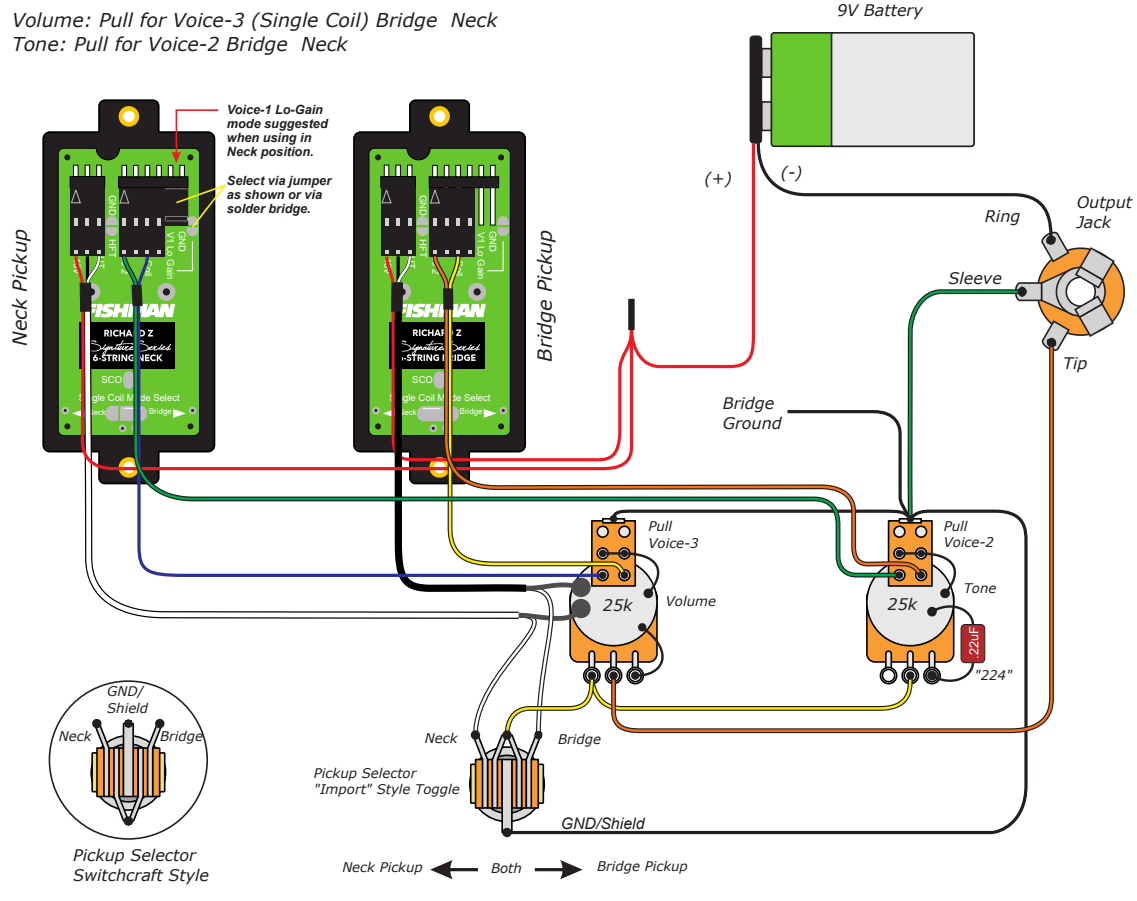
Volume: Pull for Voice-3 (Single Coil) Bridge Neck
Tone: Pull for Voice-2 Bridge Neck